EDUCATIONAL SiPM PROJECT MOTHER BOARD

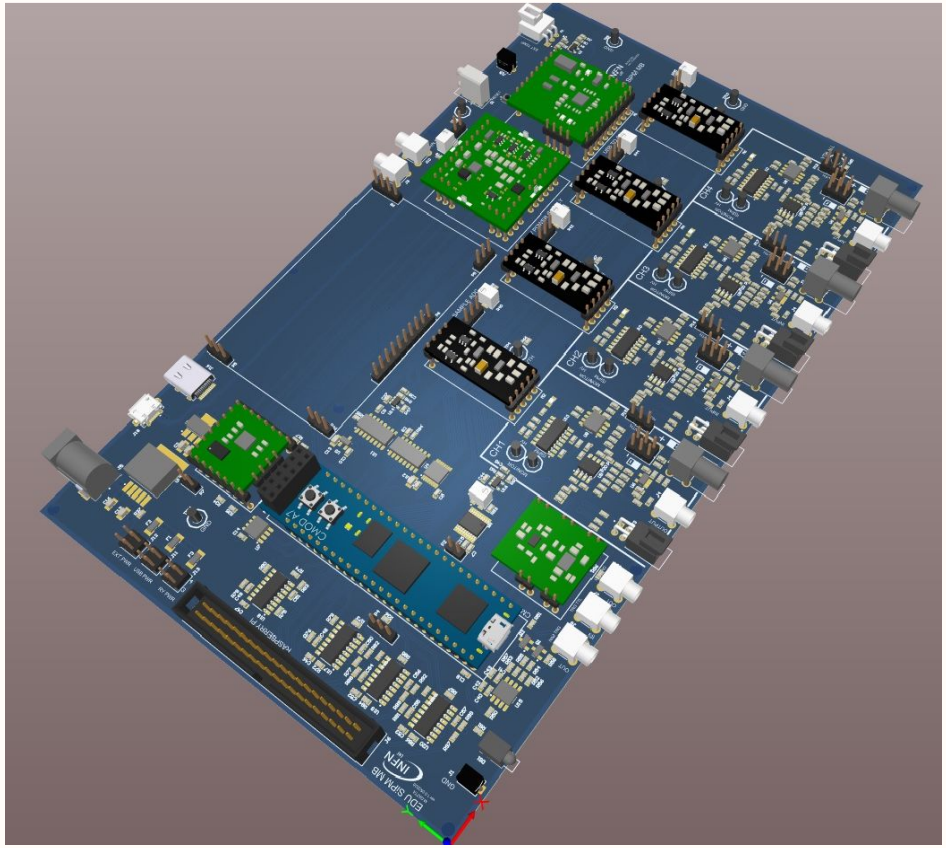

Note:
28/05/2020
1. Cambiato il buffer vecchio con il 74fct3244a che ha più corrente ed è alimentato a 3.3V
2. Inserita la resistenza di pull-up sul MISO
3. Cambiati i valori delle R per gli shaper (100ns = 2.3K x 10pF (k=4.25) ; 1us=1K x 1nF (k=1))

U_EDU SiPM MB
EDU SiPM MB.SchDoc

Title *EDU SiPM MB*			
Size: A4	Page Number: 1.	Revision:	
Date: 29/05/2020	Time: 14:38:54	Sheet 1 of 8	
File name: Front Page.SchDoc		Status	

INFN - LNF
Via E. Fermi 54 (ex 40)
00044 FRASCATI
ROMA

SELF
Servizio Elettronico Laboratori Frascati

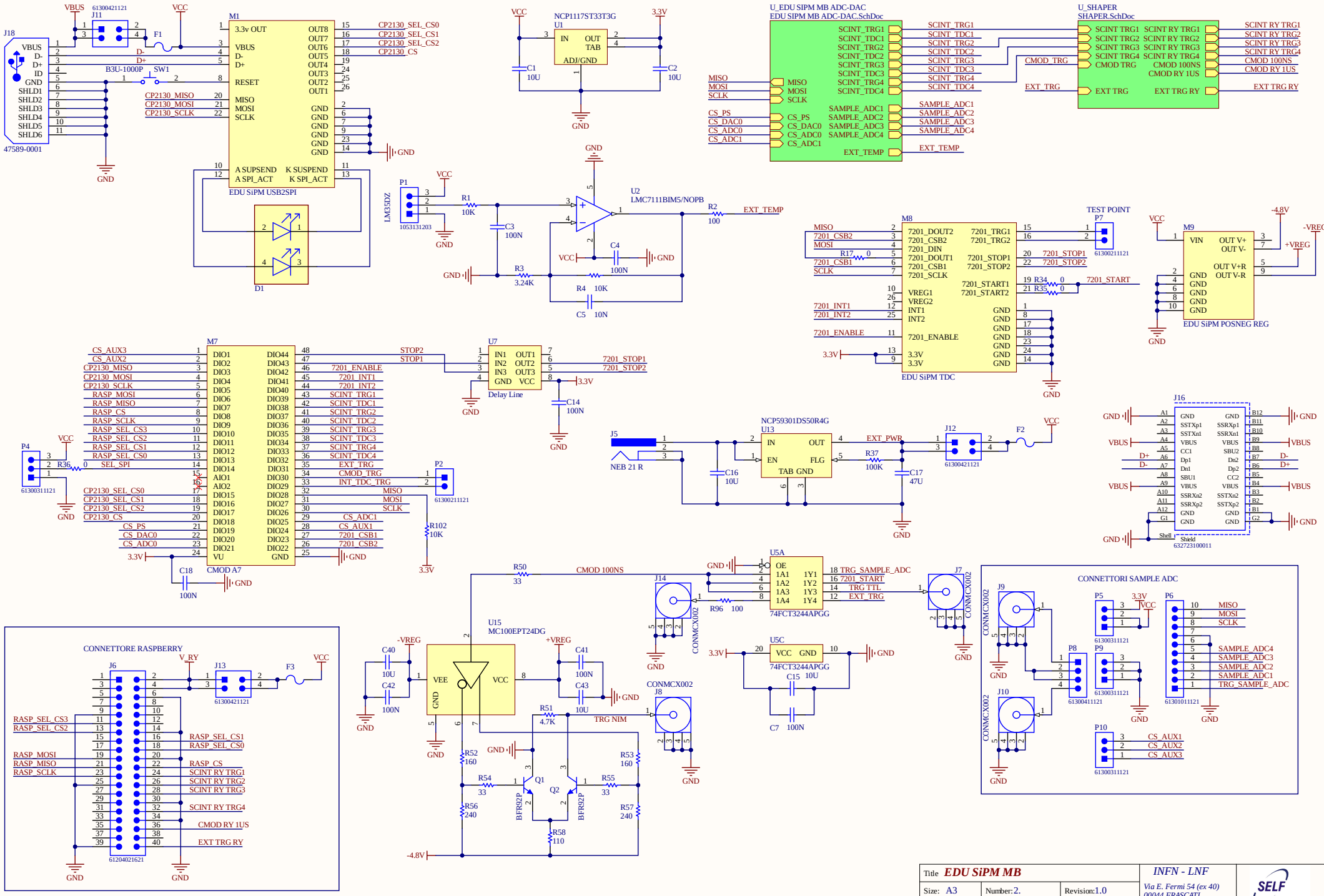
J18
47589-0001
VBUS
D-
D+
ID
GND
SHLD1
SHLD2
SHLD3
SHLD4
SHLD5
SHLD6
J11
61300421121
F1
VCC
B3U-1000P
SW1
M1
3.3v OUT
VBUS
D-
D+
RESET
MISO
MOSI
SCLK
A SUPSEND
A SPI_ACT
K SUSPEND
K SPI_ACT
OUT8
OUT7
OUT6
OUT5
OUT4
OUT3
OUT2
OUT1
CP2130_SEL_CS0
CP2130_SEL_CS1
CP2130_SEL_CS2
CP2130_CS
CP2130_MISO
CP2130_MOSI
CP2130_SCLK
EDU SiPM USB2SPI
D1
NCP1117ST33T3G
U1
IN
OUT
TAB
ADJ/GND
C1
10U
C2
10U
3.3V
U_EDU SIPM MB ADC-DAC
EDU SIPM MB ADC-DAC.SchDoc
SCINT_TRG1
SCINT_TDC1
SCINT_TRG2
SCINT_TDC2
SCINT_TRG3
SCINT_TDC3
SCINT_TRG4
SCINT_TDC4
MISO
MOSI
SCLK
CS_PS
CS_DAC0
CS_ADC0
CS_ADC1
SAMPLE_ADC1
SAMPLE_ADC2
SAMPLE_ADC3
SAMPLE_ADC4
EXT_TEMP
U_SHAPER
SHAPER.SchDoc
SCINT RY TRG1
SCINT RY TRG2
SCINT RY TRG3
SCINT RY TRG4
CMOD TRG
CMOD 100NS
CMOD RY 1US
EXT TRG
EXT TRG RY
CMOD_TRG
EXT_TRG
LM35DZ
1053131203
R1
10K
C3
100N
U2
LMC7111BIM5/NOPB
R2
100
R3
3.24K
R4
10K
C5
10N
C4
100N
M8
EDU SiPM TDC
7201_DOUT2
7201_CSB2
7201_DIN
7201_DOUT1
7201_CSB1
7201_SCLK
VREG1
VREG2
INT1
INT2
7201_ENABLE
3.3V
7201_TRG1
7201_TRG2
7201_STOP1
7201_STOP2
7201_START1
7201_START2
7201_START
7201_INT1
7201_INT2
R17
R34
R35
TEST POINT
P7
61300211121
M9
EDU SiPM POSNEG REG
VIN
OUT V+
OUT V-
OUT V+R
OUT V-R
-4.8V
-VREG
+VREG
M7
CMOD A7
DIO1
DIO2
DIO3
DIO4
DIO5
DIO6
DIO7
DIO8
DIO9
DIO10
DIO11
DIO12
DIO13
DIO14
AIO1
AIO2
DIO15
DIO16
DIO17
DIO18
DIO19
DIO20
DIO21
VU
DIO44
DIO43
DIO42
DIO41
DIO40
DIO39
DIO38
DIO37
DIO36
DIO35
DIO34
DIO33
DIO32
DIO31
DIO30
DIO29
DIO28
DIO27
DIO26
DIO25
DIO24
DIO23
DIO22
GND
CS_AUX3
CS_AUX2
RASP_MOSI
RASP_MISO
RASP_CS
RASP_SCLK
RASP_SEL_CS3
RASP_SEL_CS2
RASP_SEL_CS1
RASP_SEL_CS0
SEL_SPI
STOP2
STOP1
7201_ENABLE
7201_INT1
7201_INT2
SCINT_TRG1
SCINT_TDC1
SCINT_TRG2
SCINT_TDC2
SCINT_TRG3
SCINT_TDC3
SCINT_TRG4
SCINT_TDC4
EXT_TRG
CMOD_TRG
INT_TDC_TRG
MISO
MOSI
SCLK
CS_ADC1
CS_AUX1
7201_CSB1
7201_CSB2
R36
P4
61300311121
P2
61300211121
R102
10K
C18
100N
U7
Delay Line
IN1
IN2
IN3
GND
OUT1
OUT2
OUT3
VCC
C14
100N
J5
NEB 21 R
NCP59301DS50R4G
U13
IN
OUT
EN
FLG
TAB GND
EXT_PWR
R37
100K
C16
10U
C17
47U
J12
61300421121
F2
J16
632723100011
Shell
Shield
U15
MC100EPT24DG
VEE
VCC
GND
C40
10U
C42
100N
C41
100N
C43
10U
R50
33
CMOD 100NS
R51
4.7K
TRG NIM
R52
160
R53
160
R54
33
R55
33
R56
240
R57
240
R58
110
Q1
Q2
BFR92P
J14
CONMCX002
J8
U5A
74FCT3244APGG
OE
1A1
1A2
1A3
1A4
1Y1
1Y2
1Y3
1Y4
TRG_SAMPLE_ADC
7201_START
TRG TTL
EXT_TRG
R96
100
U5C
VCC
GND
C15
10U
C7
100N
J7
CONNETTORI SAMPLE ADC
J9
J10
P5
P6
P8
P9
P10
61300311121
61300411121
61301011121
SAMPLE_ADC4
SAMPLE_ADC3
SAMPLE_ADC2
SAMPLE_ADC1
TRG_SAMPLE_ADC
CS_AUX1
CS_AUX2
CS_AUX3
CONNETTORE RASPBERRY
J6
J13
V_RY
F3
61204021621
RASP_SEL_CS3
RASP_SEL_CS2
RASP_SEL_CS1
RASP_SEL_CS0
RASP_MOSI
RASP_MISO
RASP_SCLK
RASP_CS
SCINT RY TRG1
SCINT RY TRG2
SCINT RY TRG3
SCINT RY TRG4
CMOD RY 1US
EXT TRG RY
Title
EDU SiPM MB
Size: A3
Number: 2.
Revision: 1.0
Date: 29/05/2020
Time: 14:38:54
Sheet 2 of 8
File: K:\AD19\Projects\Educational\EDU SiPM MB\EDU SiPM MB\EDU SiPM MB.SchDoc
INFN - LNF
Via E. Fermi 54 (ex 40)
00044 FRASCATI
ROMA
SELF
Servizio Elettronico Laboratori Frascati

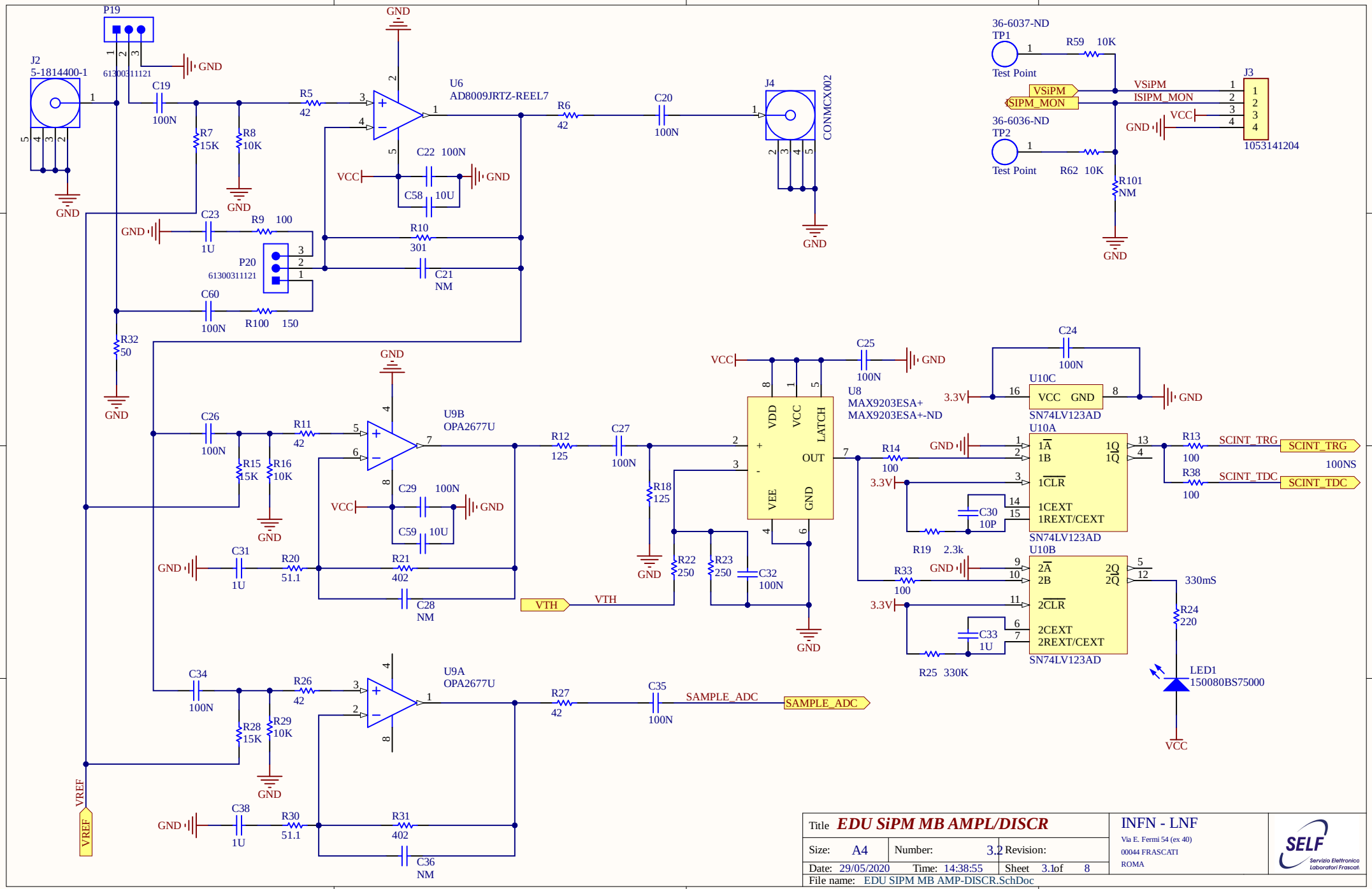

Title	**EDU SiPM MB AMPL/DISCR**		INFN - LNF Via E. Fermi 54 (ex 40) 00044 FRASCATI ROMA
Size: A4	Number: 3.2	Revision:	
Date: 29/05/2020	Time: 14:38:55	Sheet 3.1 of 8	
File name: EDU SIPM MB AMP-DISCR.SchDoc			

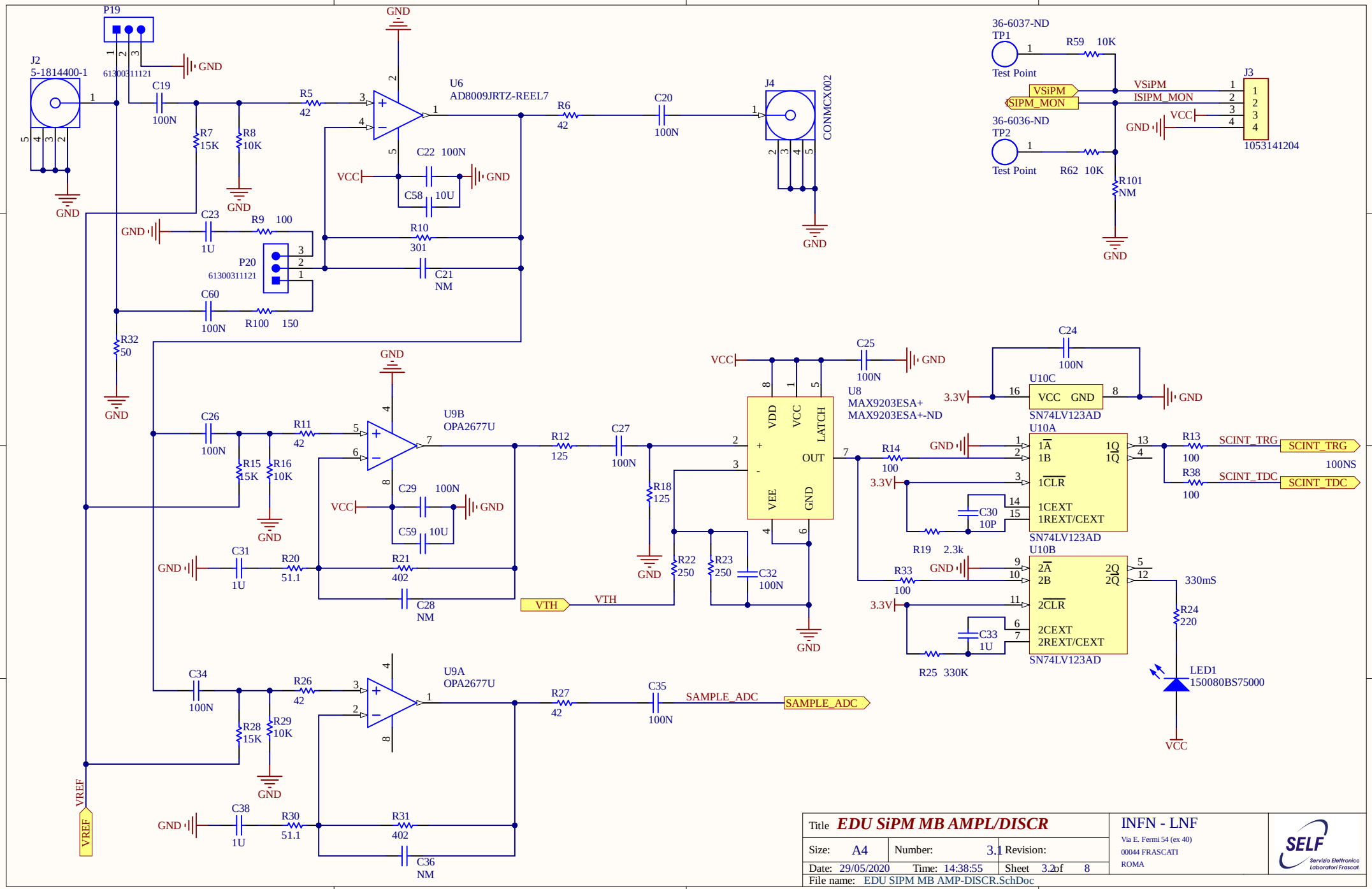

Title	EDU SiPM MB AMPL/DISCR		INFN - LNF Via E. Fermi 54 (ex 40) 00044 FRASCATI ROMA
Size: A4	Number: 3.1	Revision:	
Date: 29/05/2020	Time: 14:38:55	Sheet 3.2 of 8	
File name: EDU SIPM MB AMP-DISCR.SchDoc			

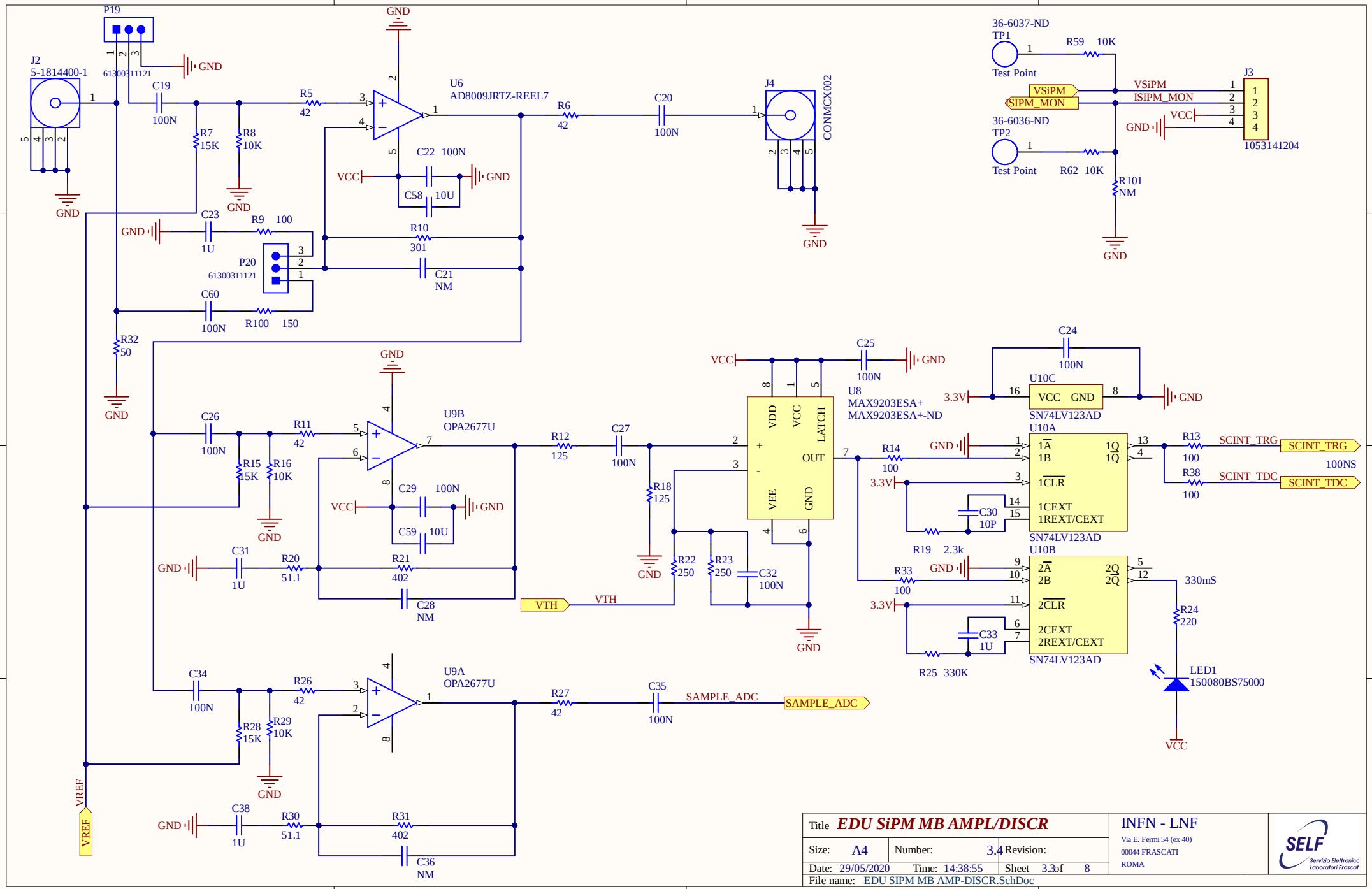

Title	**EDU SiPM MB AMPL/DISCR**		INFN - LNF Via E. Fermi 54 (ex 40) 00044 FRASCATI ROMA
Size: A4	Number: 3.4	Revision:	
Date: 29/05/2020	Time: 14:38:55	Sheet 3.3 of 8	
File name: EDU SIPM MB AMP-DISCR.SchDoc			

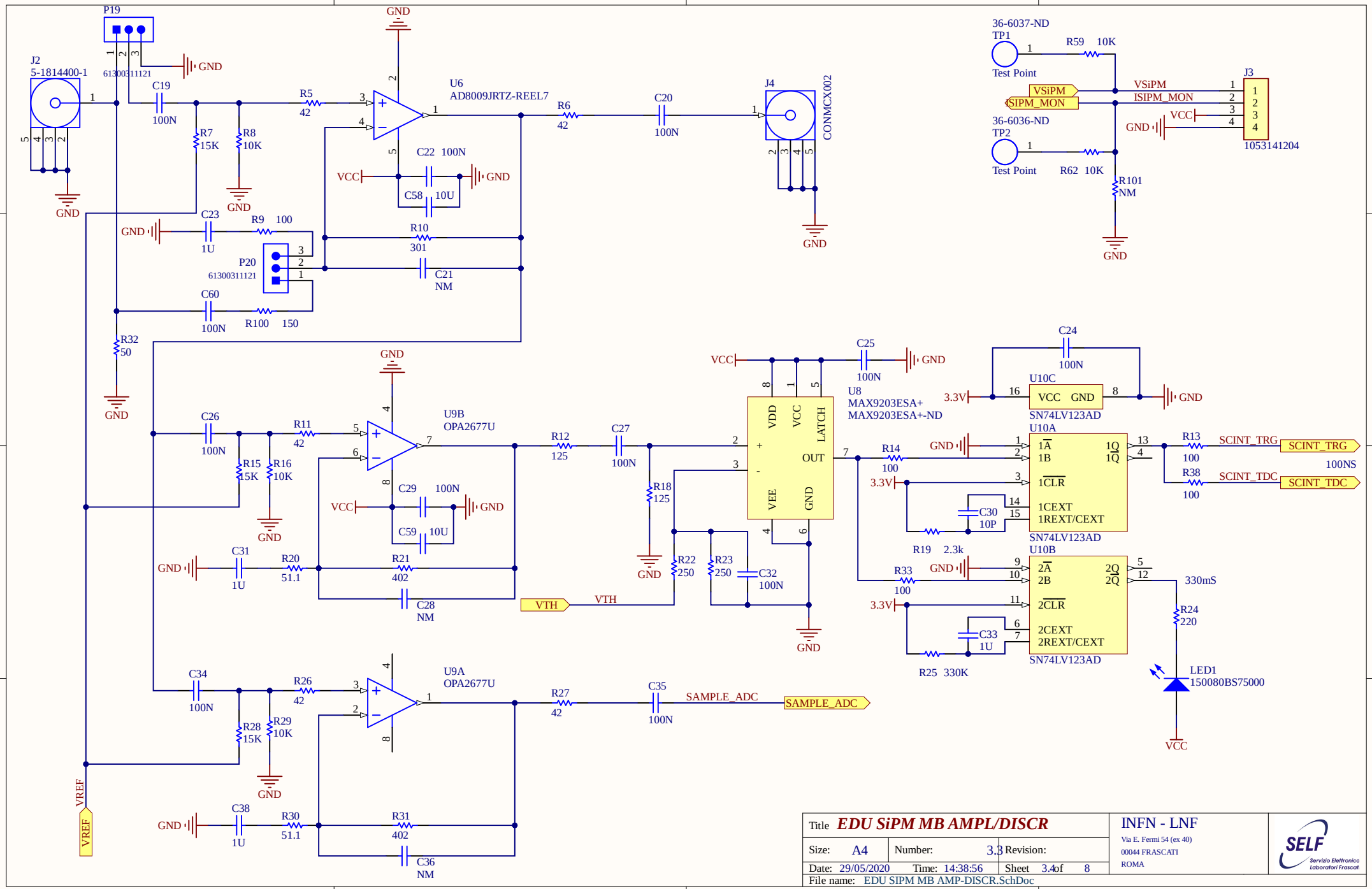

Title	EDU SiPM MB AMPL/DISCR		INFN - LNF Via E. Fermi 54 (ex 40) 00044 FRASCATI ROMA
Size: A4	Number: 3.3	Revision:	
Date: 29/05/2020	Time: 14:38:56	Sheet 3.4 of 8	
File name: EDU SIPM MB AMP-DISCR.SchDoc			

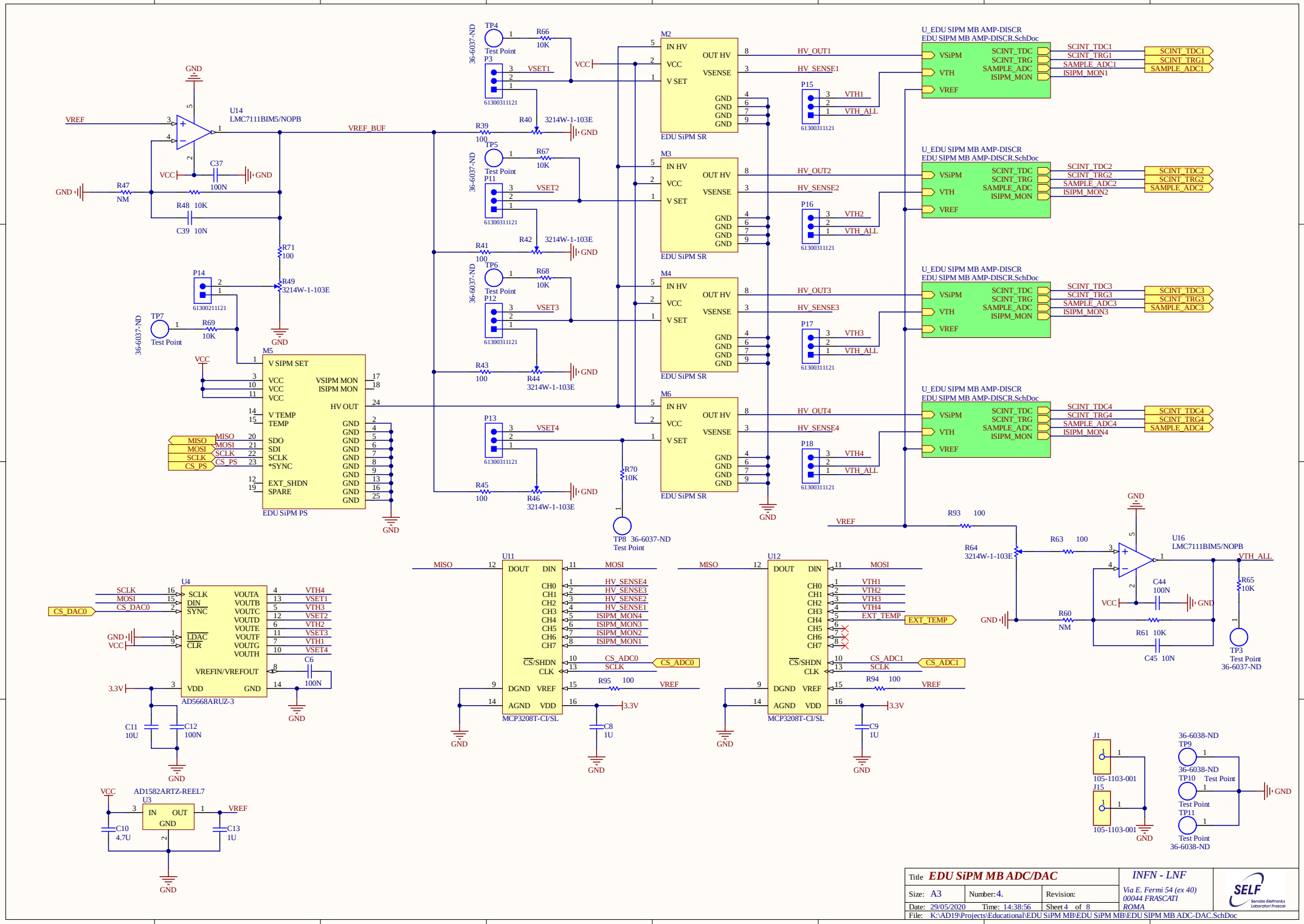
U14
LMC7111BIM5/NOPB
VREF
VREF_BUF
R47
NM
R48 10K
C39 10N
C37
100N
R71
100
R49
3214W-1-103E
P14
61300211121
TP7
Test Point
R69
10K
M5
V SIPM SET
VCC
VSIPM MON
ISIPM MON
HV OUT
V TEMP
TEMP
SDO
SDI
SCLK
*SYNC
EXT_SHDN
SPARE
EDU SiPM PS
MISO
MOSI
SCLK
CS_PS
TP4
TP5
TP6
TP8
Test Point
36-6037-ND
R66
R67
R68
R39
R41
R43
R45
R40
R42
R44
R46
3214W-1-103E
P3
P11
P12
P13
61300311121
VSET1
VSET2
VSET3
VSET4
R70
10K
M2
M3
M4
M6
IN HV
OUT HV
VCC
VSENSE
V SET
EDU SiPM SR
HV_OUT1
HV_SENSE1
HV_OUT2
HV_SENSE2
HV_OUT3
HV_SENSE3
HV_OUT4
HV_SENSE4
P15
P16
P17
P18
VTH1
VTH2
VTH3
VTH4
VTH_ALL
U_EDU SIPM MB AMP-DISCR
EDU SIPM MB AMP-DISCR.SchDoc
VSiPM
VTH
VREF
SCINT_TDC
SCINT_TRG
SAMPLE_ADC
ISIPM_MON
SCINT_TDC1
SCINT_TRG1
SAMPLE_ADC1
ISIPM_MON1
SCINT_TDC2
SCINT_TRG2
SAMPLE_ADC2
ISIPM_MON2
SCINT_TDC3
SCINT_TRG3
SAMPLE_ADC3
ISIPM_MON3
SCINT_TDC4
SCINT_TRG4
SAMPLE_ADC4
ISIPM_MON4
U4
AD5668ARUZ-3
SCLK
MOSI
CS_DAC0
LDAC
CLR
VOUTA
VOUTB
VOUTC
VOUTD
VOUTE
VOUTF
VOUTG
VOUTH
VREFIN/VREFOUT
VDD
GND
C6
100N
C11
10U
C12
100N
3.3V
U11
MCP3208T-CI/SL
DOUT
DIN
CH0
CH1
CH2
CH3
CH4
CH5
CH6
CH7
CS/SHDN
CLK
DGND
VREF
AGND
VDD
CS_ADC0
R95 100
C8
1U
U12
CS_ADC1
R94 100
C9
1U
EXT_TEMP
U16
LMC7111BIM5/NOPB
R93 100
R64
3214W-1-103E
R63 100
R60
NM
R61 10K
C44
100N
C45 10N
R65
10K
TP3
Test Point
36-6037-ND
AD1582ARTZ-REEL7
U3
IN
OUT
C10
4.7U
C13
1U
J1
J15
105-1103-001
TP9
TP10
TP11
36-6038-ND
Test Point
Title EDU SiPM MB ADC/DAC
Size: A3
Number: 4.
Revision:
Date: 29/05/2020
Time: 14:38:56
Sheet 4 of 8
File: K:\AD19\Projects\Educational\EDU SiPM MB\EDU SiPM MB\EDU SiPM MB ADC-DAC.SchDoc
INFN - LNF
Via E. Fermi 54 (ex 40)
00044 FRASCATI
ROMA
SELF
Servizio Elettronico Laboratori Frascati

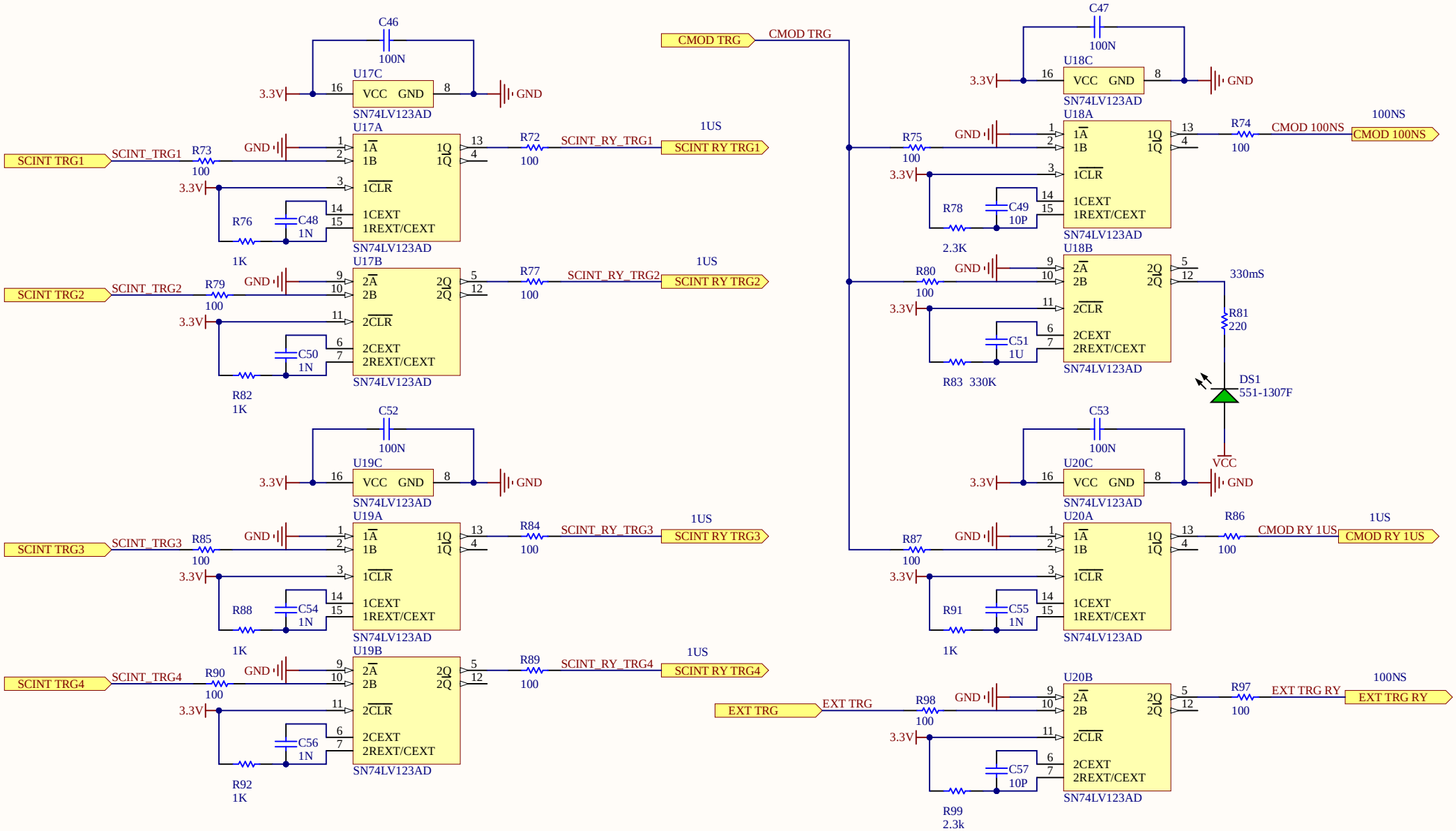

Title	***EDU SiPM MB SHAPER***		INFN - LNF Via E. Fermi 54 (ex 40) 00044 FRASCATI ROMA
Size: A4	Page Number: 5.	Revision:	
Date: 29/05/2020	Time: 14:38:56	Sheet 5 of 8	
File name: SHAPER.SchDoc		Status	